SM SOLAR MOUNT INSTALLATION GUIDE

TABLE OF CONTENTS

A - SYSTEM COMPONENTS
B- MODULE COMPATIBILITY
C- SYSTEM LAYOUT
D- FIRE SYSTEM COMPLIANCE NOTES
E - ROOF ATTACHMENT & L-FEET
F-SPLICE & THERMAL BREAK
G- ATTACH RAIL TO L-FEET
H- MICROINVERTER MOUNTING
I- SYSTEM GROUNDING
J - ENDCLAMP, TRIM & FIRST MODULE
K- BONDING MIDCLAMP & TRIM
L- REMAINING MODULES & TRIM
M- BONDING CONNECTION GROUND PATHS
N- BONDING CONNECTION GROUND PATHS - MAINTENANCE
0- TRIM RETROFIT INSTALLATION

DOCUMENT REVISION HISTORY - INTERNAL USE ONLY - DO NOT PUBLISH FOR PUBLIC RELEASE	
Publication Date	**Notes / Changes**
16JAN05	SM Light Installation Changes
2016APR15	LA County Approval, Grounding Lug Installation Procedures & SM Trim

PUB2016APR15

SM SOLAR MOUNT

INSTALLATION GUIDE

TABLE OF CONTENTS

A - SYSTEM COMPONENTS
B- MODULE COMPATIBILITY
C- SYSTEM LAYOUT
D- FIRE SYSTEM COMPLIANCE NOTES
E - ROOF ATTACHMENT & L-FEET
F- SPLICE & THERMAL BREAK
G- ATTACH RAIL TO L-FEET
H- MICROINVERTER MOUNTING
I- SYSTEM GROUNDING
J - ENDCLAMP, TRIM & FIRST MODULE
K- BONDING MIDCLAMP & TRIM
L- REMAINING MODULES & TRIM
M- BONDING CONNECTION GROUND PATHS
N- BONDING CONNECTION GROUND PATHS - MAINTENANCE
0- TRIM RETROFIT INSTALLATION

PUB2016APR15

STANDARD SYSTEM COMPONENTS

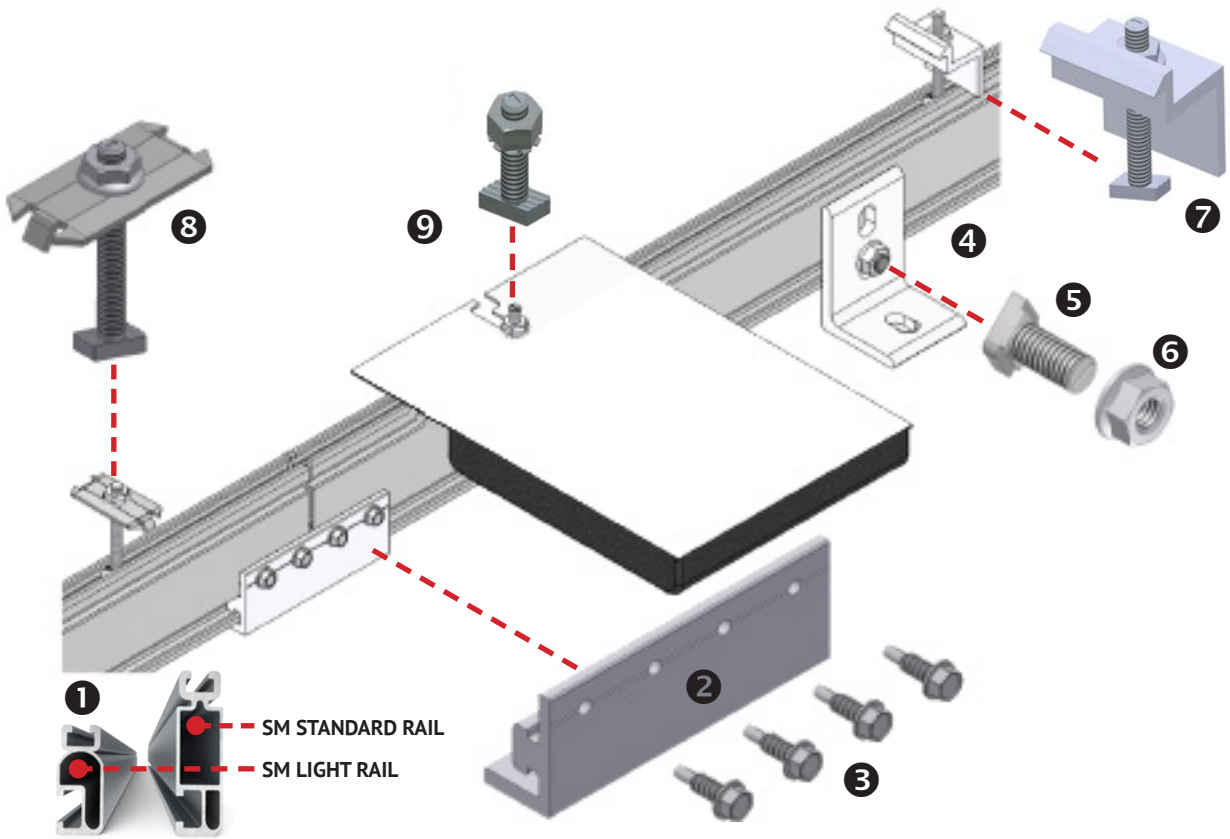

❶**RAIL:** Supports PV modules. Use at least two per row of modules. Aluminum extrusion, available in mill, clear anodized, or dark anodized.

❷**RAIL SPLICE:** Non structural splice joins, aligns, and electrically bonds rail sections into single length of rail. Forms either a rigid or thermal expansion joint, 4 inches long, pre-drilled (see page F). Anodized aluminum extrusion available in clear or dark.

❸**SELF-DRILLING SCREW:** (No. 12 x ¾") – Use 4 per rigid splice or 2 per expansion joint. Stainless steel. Supplied with splice. In combination with rigid splice, provides rail to rail bond.

❹**L-FOOT:** Use to secure rails through roofing material to building structure. Refer to loading tables or U-Builder for spacing.

❺**L-FOOT T- BOLT:** (3/8" x ¾") – Use one per L-foot to secure rail to L-foot. Stainless steel. Supplied with L-foot. In combination with flange nut, provides electrical bond between rail and L-foot.

❻**SERRATED FLANGE NUT (3/8"):** Use one per L-foot to secure and bond rail to L-foot. Stainless steel. Supplied with L-foot.

❼**MODULE ENDCLAMP:** Provides bond from rail to endclamp. Pre-assembled aluminum clamp available in clear or dark finish. Supplied washer keeps clamp and bolt upright for ease of assembly.

❽**MODULE MIDCLAMP:** Pre-assembled clamp provides module to module and module to rail bond. Stainless steel clamp and T-bolt. Available in clear or dark finish.

❾**MICROINVERTER MOUNTING BOLT:** Pre-assembled bolt and nut attaches and bonds microinverter to rail. Washer at base keeps bolt upright for ease of assembly.

NOTE - POSITION INDICATOR: T-bolts have a slot in the hardware end corresponding to the direction of the T-Head.

Wrenches and Torque

	Wrench Size	Recommended Torque (ft-lbs)
1/4" Hardware ❼❽❾	7/16"	*10
3/8" Hardware ❺	9/16"	*30
#12 Hardware ❸	5/16"	10

Torques are not designed for use with wood connectors
*w/Anti-Seize.

Anti-Seize*

Stainless steel hardware can seize up, a process called galling. To significantly reduce its likelihood:
1. Apply minimal lubricant to bolts, preferably Anti-Seize commonly found at auto parts stores
2. Shade hardware prior to installation, and
3. Avoid spinning stainless nuts onto bolts at high speed.

MODULE COMPATIBILITY

INSTALLATION GUIDE

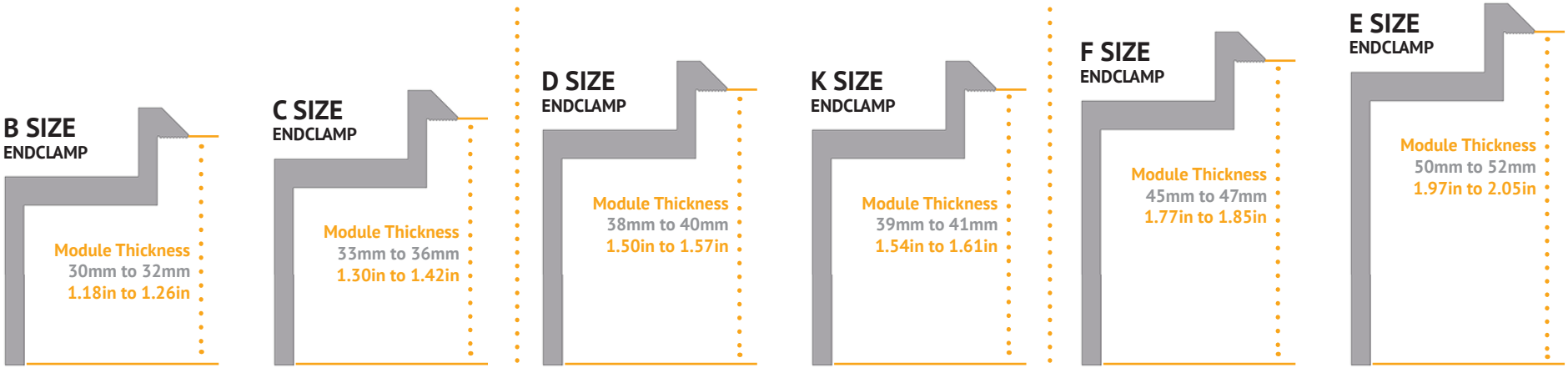

PLANNING YOUR SOLARMOUNT INSTALLATIONS

The installation can be laid out with rails parallel to the rafters or perpendicular to the rafters. Note that SOLARMOUNT rails make excellent straight edges for doing layouts.

Center the installation area over the structural members as much as possible.

Leave enough room to safely move around the array during installation. Some building codes and fire codes require minimum clearances around such installations, and the installer should check local building code requirements for compliance.

The length of the installation area is equal to:

- the total width of the modules,
- plus ¼" inch for each space between modules (for mid- clamp),
- plus approximately 3 inches (1½ inches for each Endclamp)

LAYING OUT L-FEET FOR TOP CLAMPS

L-feet, in conjunction with proper flashing equipment and techniques, can be used for attachment through existing roofing material, such as asphalt shingles, sheathing or sheet metal to the building structure.

Locate and mark the position of the L-feet lag screw holes within the installation area as shown below. Follow manufacturer module guide for rail spacing based on appropriate mounting locations.

If multiple rows are to be installed adjacent to one another, it is not likely that each row will be centered above the rafters. Adjust as needed, following the guidelines below as closely as possible.

Refer to Unirac Solarmount D&E Guide & U-Builder for allowable spans and cantilevers.

RAILS MAY BE PLACED PARALLEL OR PERPENDICULAR TO RAFTERS

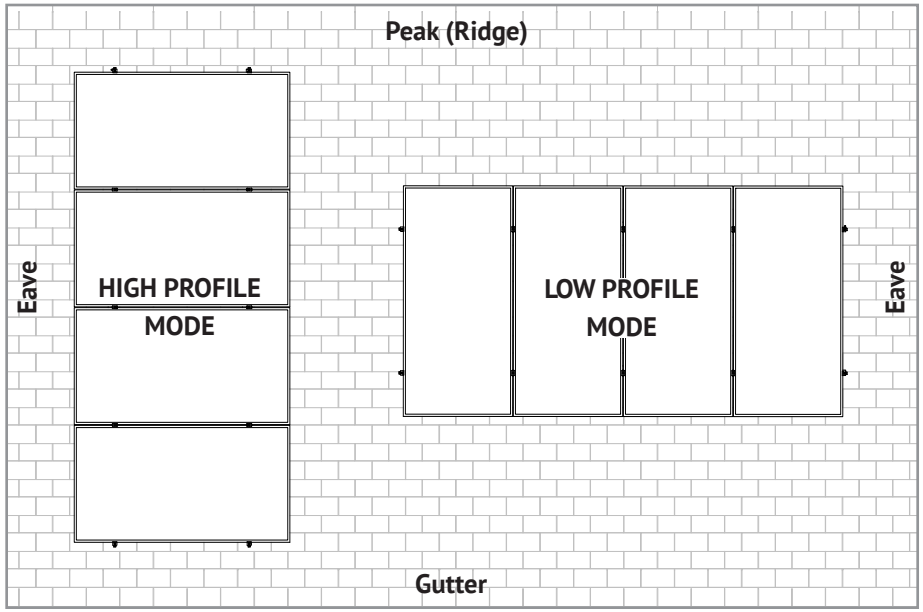

LAYOUT WITH RAILS PERPENDICULAR TO RAFTERS (RECOMMENDED)

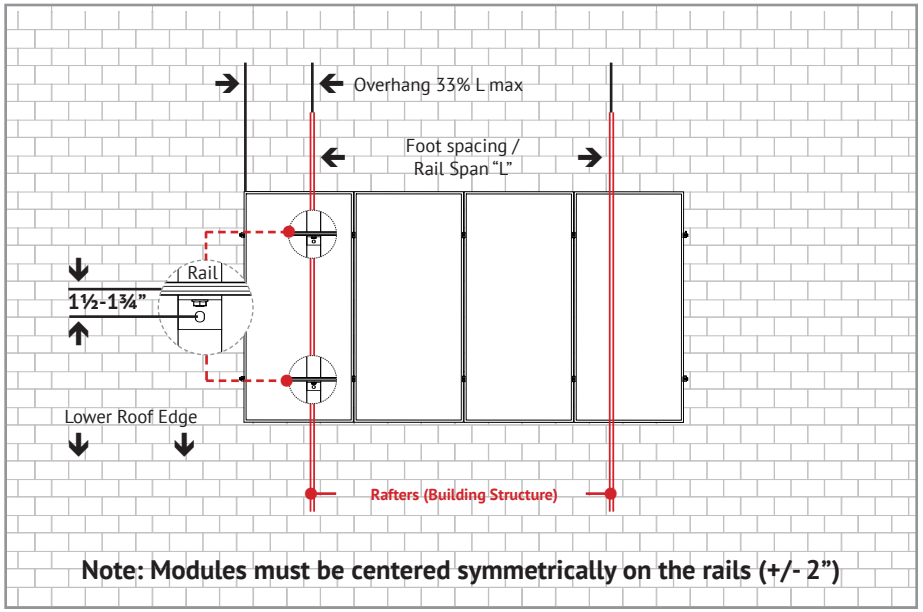

SYSTEM LEVEL FIRE CLASSIFICATION

The system fire class rating requires installation in the manner specified in the SOLARMOUNT Installation Guide. SOLARMOUNT has been classified to the system level fire portion of UL 1703. This UL 1703 classification has been incorporated into our UL 2703 product certification. SOLARMOUNT has achieved system level performance for steep sloped roofs. System level fire performance is inherent in the SOLARMOUNT design, and no additional mitigation measures are required. The fire classification rating is only valid on roof pitches greater than 2:12 (slopes ≥ 2 inches per foot, or 9.5 degrees). There is no required minimum or maximum height limitation above the roof deck to maintain the system fire rating for SOLARMOUNT. Module Types & System Level Fire Ratings are listed below:

Rail Type	Module Type	System Level Fire Rating	Rail Direction	Module Orientation	Mitigation Required
Standard Rail	Type 1, Type 2, Type 3 & Type 10	Class A, Class B & Class C	East-West	Landscape OR Portrait	None Required
			North-South	Landscape OR Portrait	None Required
Light Rail	Type 1 & Type 2	Class A, Class B & Class C	East-West	Landscape OR Portrait	None Required
			North-South	Landscape OR Portrait	None Required

UL2703 CERTIFICATION MARKING LABEL

Unirac SOLARMOUNT is listed to UL 2703. Marking Labels are shipped with the Midclamps. After the racking system is fully assembled, a single Marking Label should be applied to the SOLARMOUNT rail at the edge of the array. Note: The sticker label should be placed such that it is visible, but not outward facing.

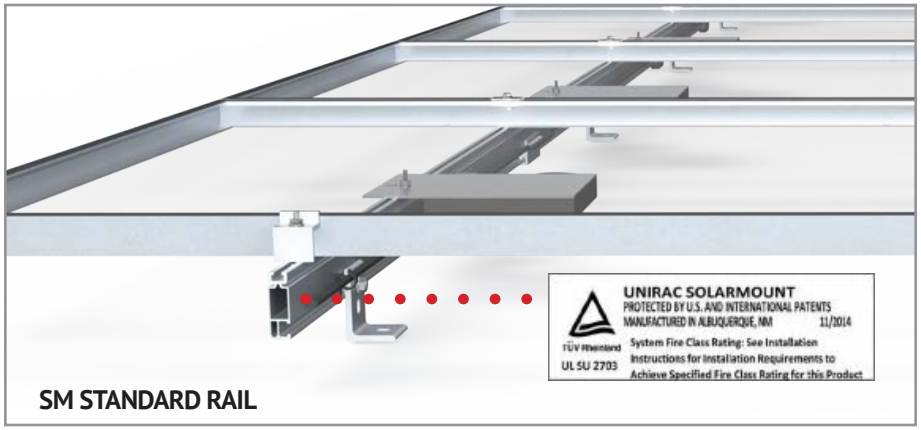

SM STANDARD RAIL

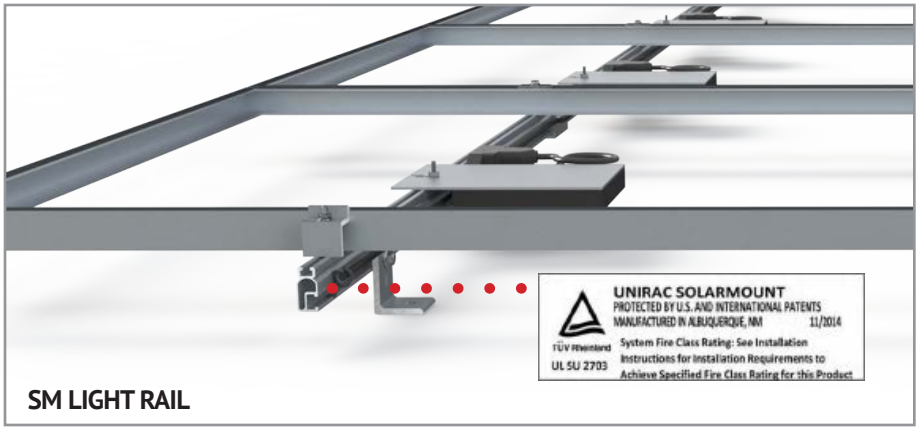

SM LIGHT RAIL

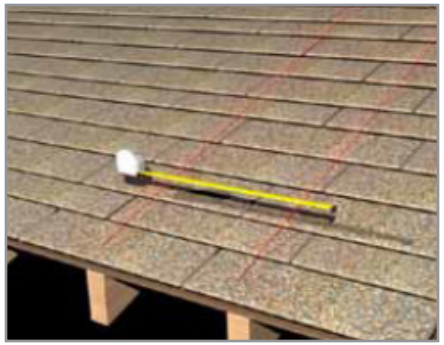

ROOF PREPARATION: Layout and install flashing at rafter locations determined per Design and Engineering Guide.

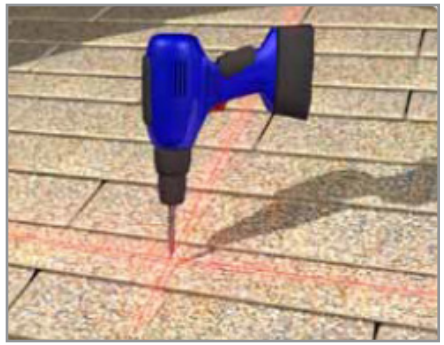

DRILL PILOT HOLES: Center the roof attachment over the rafter and drill a pilot hole(s) for the lag bolt(s).

NOTE: Determine lag bolt size and embedment depth.

Quick Tip: Pre-drill the pilot hole through the flat flashing lag bolt location for easier installation.

FLAT FLASHING INSTALLATION: Insert the Flat Flashing so the top part is under the next row of shingles and the hole lines up with the pilot hole.

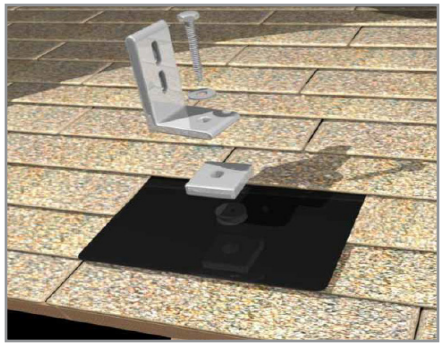

INSTALL LAG BOLTS & L-FOOT: Insert the lag bolt through the L-Foot in the order shown in the illustration. Verify proper orientation before tightening lag bolts.

See Unirac Flat Flashing Manual for Additional Details.

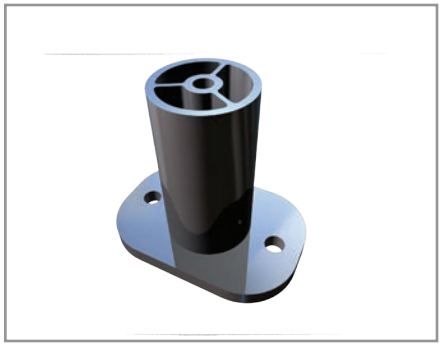

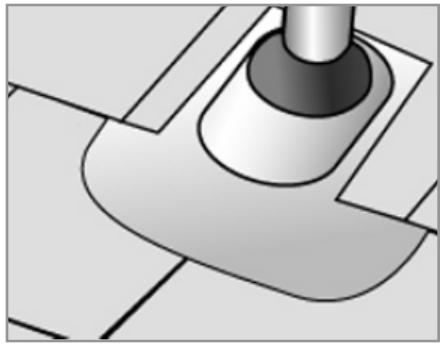

2 PIECE ALUMINUM STANDOFF WITH FLASHING & L-FOOT:

- If necessary cut an opening in the roofing material over a rafter to accommodate the flashing riser.
- Install the standoff, ensuring that both lag bolts are screwed into the rafter.
- Insert the flashing under the shingle above and over the shaft of the standoff. (No-Calk™ collar does not require sealing of the flashing and standoff shaft)
- Add L-Foot to top with bolt that secures the EPDM washer to the top of the standoff.

See Standoffs & Flashings Installation Manual 907.2 for Additional Details.

TOP MOUNT TILE HOOK & L-FOOT:

- Remove or slide up the roof tile, position the roof hook above the roof rafter
- Place Tile Hook in the middle of the underlying interlocking tile's valley. Drill 3/16 inch pilot holes through the underlayment into the center of the rafters. Securely fasten each tile hook to the rafters with two 5/16" x 3½" lag screws. Slide down or re-insert the tile.
- Attach L Foot to tile roof hook.

See Tile Hook Universal Mount Installation Manual for Additional Information.

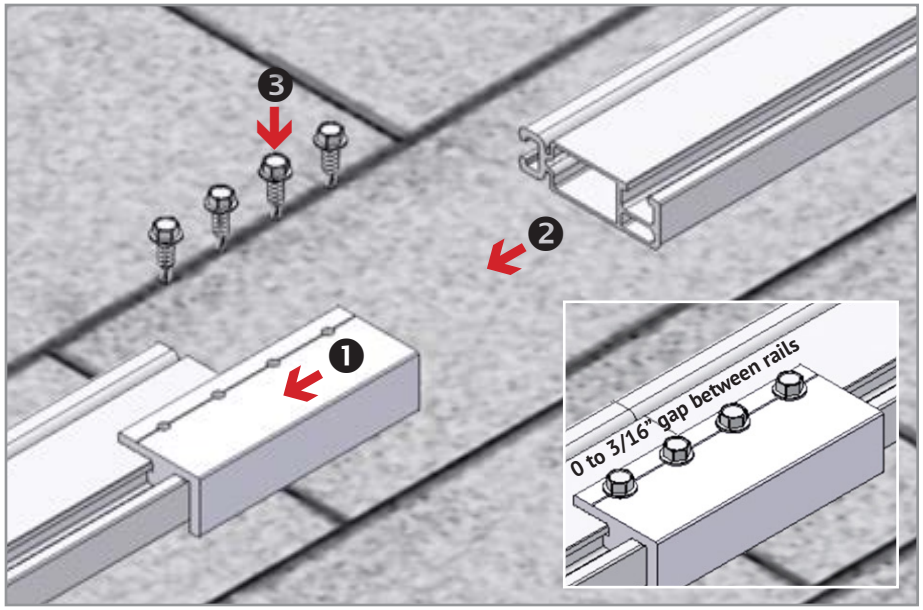

SPLICE INSTALLATION (IF REQUIRED PER SYSTEM DESIGN)

If your installation uses SOLARMOUNT splice bars, attach the rails together before mounting to the L-feet / footings. Use splice bars only with flush installations or those that use low-profile tilt legs. A rail should always be supported by more than one footing on both sides of the splice. There should be a gap between rails, up to 3/16" at the splice connections. T-bolts should not be placed less than a distance of 1" from the end of the rail regardless of a splice.

TORQUE VALUE (See Note on PG. A)

Hex head socket size 5/16" - Do not exceed 10 ft-lbs. Do not use Anti-Seize.

Max length of spliced rail is 40 ft. An expansion joint is required > 40 ft.

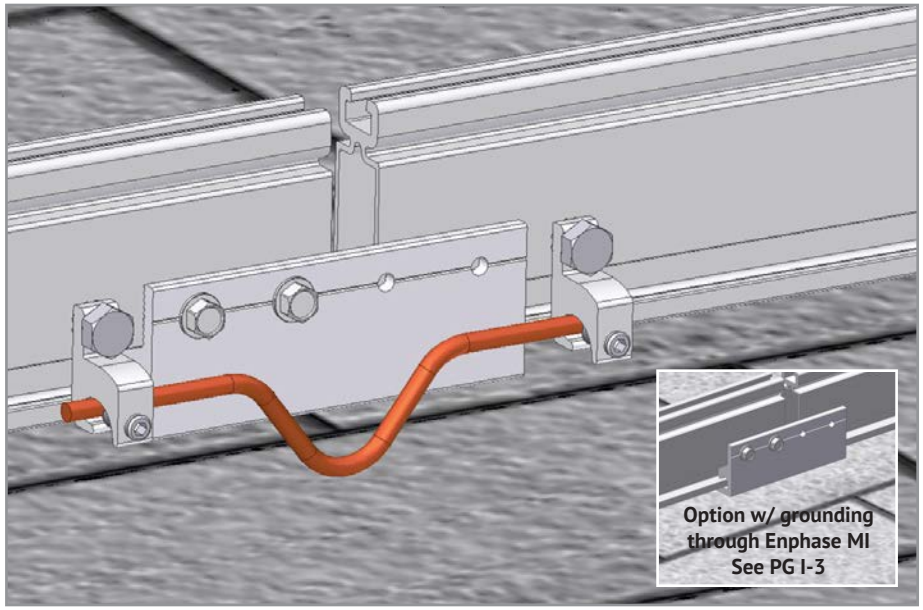

EXPANSION JOINT USED AS THERMAL BREAK

Expansion joints prevent buckling of rails due to thermal expansion. Splice bars may be used for thermal expansion joints. To create a thermal expansion joint, slide the splice bar into the footing slots of both rail lengths. Leave approximately ½" between the rail segments. Secure the splice bar with two screws on one side only. Footings (such as L-feet or standoffs) should be secured normally on both sides of the splice. No PV module or mounting hardware component should straddle the expansion joint. Modules must clearly end before the joint with mounting hardware (top mount Endclamps) terminating on that rail. T-bolts should not be placed less than a distance of 1" from the end of the rail regardless of a splice. The next set of modules would then start after the splice with mounting hardware beginning on the next rail. **A thermal break is required every 40 feet of continuously connected rail. For additional concerns on thermal breaks in your specific project, please consult a licensed structural engineer. Runs of rail less than 40 feet in length, with more than two pairs spliced together, are an acceptable installation for the SOLARMOUNT systems.**

Bonding connection for splice used as a thermal break. Option shown uses two Ilsco lugs (Model No. GBL-4DBT P/N GBL-4DBT - see product data sheet for more details) and solid copper wire.

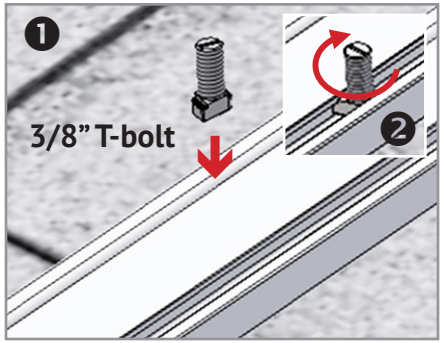

PLACE T-BOLT INTO RAIL & SECURE BOLT: Insert 3/8" T-bolt into rail at L-foot locations. Apply Anti-Seize to bolt. Rotate T-bolt into position.

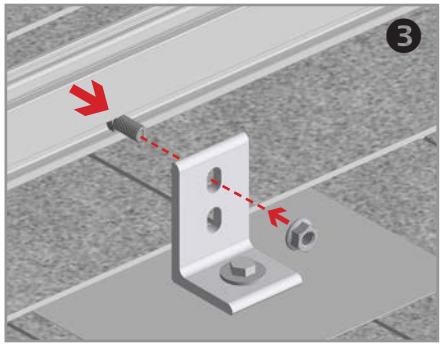

SECURE T-BOLT: Apply Anti-Seize to bolt. Rotate T-bolt into position.

Note:
Allowable L-foot slot locations for SM Standard & Light Rail.

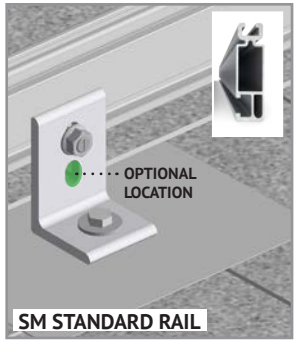

SM STANDARD RAIL: Use either slot to connect the L-foot to the rail to obtain the desired height and alignment when using SM Standard rail.

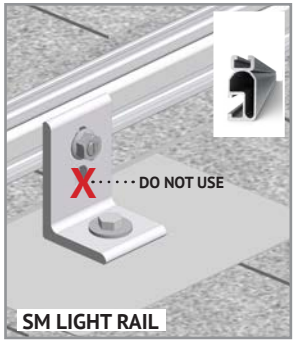

SM LIGHT RAIL: For a lower profile array when using SM Light rail, rotate the L-foot to orient the side with only one (1) slot against the rail. **Only use the slot location closet to the rail to connect the lag bolt to the flashing / roof on the side with two (2) slots.**

NOTE: Use only the top slot to connect the L-foot to the rail to obtain the desired height and alignment when using SM Light rail.

ALIGN RAILS: Align one pair of rail ends to the edge of the installation area. The opposite pair of rail ends will overhang installation area. Do not Trim them off until the installation is complete. If the rails are perpendicular to the rafters, either end of the rails can be aligned, but the first module must be installed at the aligned end.

If the rails are parallel to the rafters, the aligned end of the rails must face the lower edge of the roof. Securely tighten all hardware after alignment is complete.

Mount modules to the rails as soon as possible. Large temperature changes may bow the rails within a few hours if module placement is delayed.

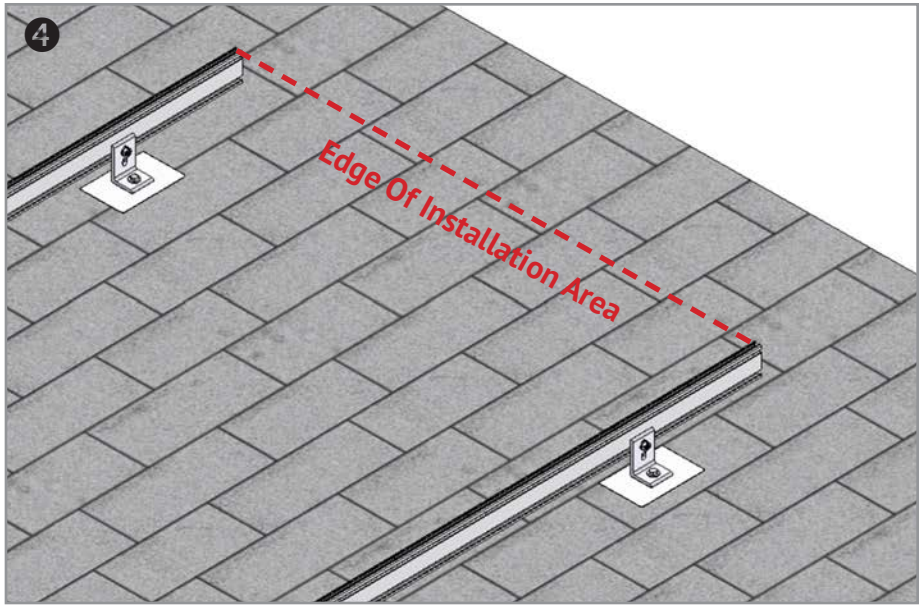

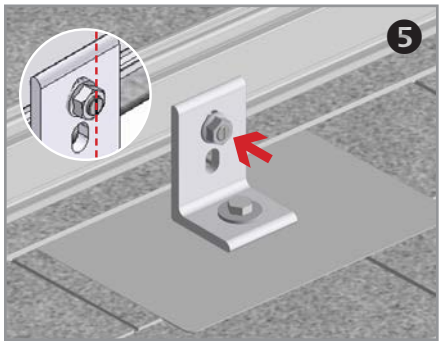

ALIGN POSITION INDICATOR: Hand tighten nut until rail alignment is complete. Verify that position indicator on bolt is vertical (perpendicular to rail)

TORQUE VALUE (See Note on PG. A)
3/8" nut to 30 ft-lbs

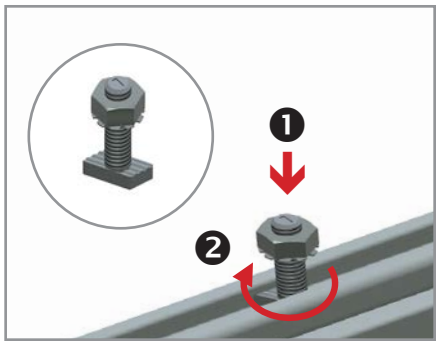

INSTALL MICROINVERTER MOUNT T-BOLT: Apply Anti-Seize and install pre-assembled ¼" dia. bonding T-bolts into top ¼" rail slot at microinverter locations. Rotate bolts into position.

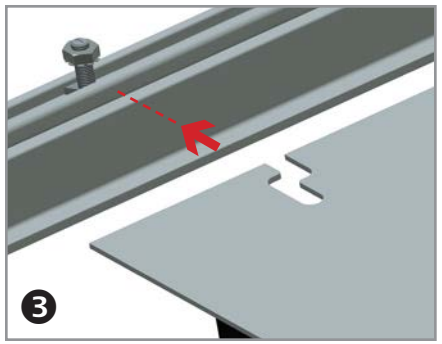

INSTALL MICROINVERTER: Install microinverter on to rail. Engage with bolt.

INSTALL MICROINVERTER:

TORQUE VALUE (See Note on PG. A)
1/4" nut to 10 ft-lbs w/Anti-Seize

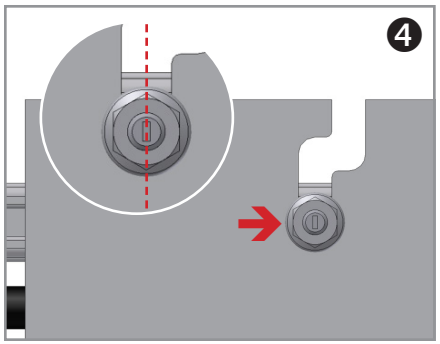

ALIGN POSITION INDICATOR: Verify that position indicator on bolt is perpendicular to rail.

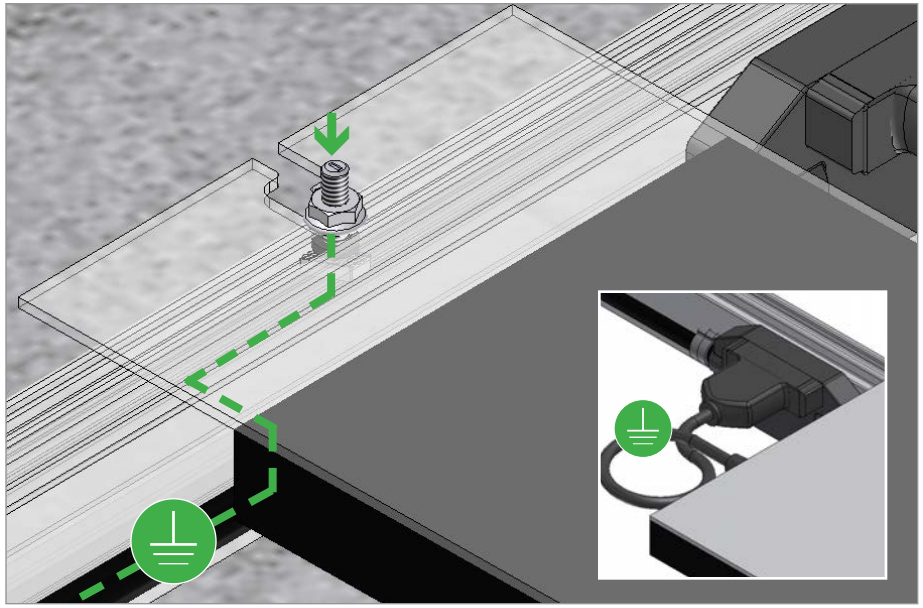

SM EQUIPMENT GROUNDING THROUGH ENPHASE MICROINVERTERS

The Enphase M215 and M250 microinverters have integrated grounding capabilities built in. In this case, the DC circuit is isolated from the AC circuit, and the AC equipment grounding conductor (EGC) is built into the Enphase Engage integrated grounding (IG) cabling.

In order to ground the SOLARMOUNT racking system through the Enphase microinverter and Engage cable assembly, there must be a minimum of three PV modules connected to the same trunk cable within a continuous row. Continuous row is defined as a grouping of modules installed and bonded per the requirements of this installation guide sharing the same two rails. The microinverters are bonded to the SOLARMOUNT rail via the mounting hardware. Complete equipment grounding is achieved through the Enphase Engage cabling with integrated grounding (IG). No additional EGC grounding cables are required, as all fault current is carried to ground through the Engage cable.

SOLARMOUNT INTEGRATED BONDING ADVANTAGE

WITH SYSTEM GROUNDING THROUGH ENPHASE MICROINVERTERS AND TRUNK CABLES

LOSE ALL THE COPPER & LUGS

ELECTRICAL GROUNDING W/ ENPHASE MICROINVERTER FOR SPLICE & THERMAL BREAK

CONTINUOUS RAIL & ELECTRICAL BONDING SPLICE	EXPANSION JOINT W/GROUNDING LUGS & COPPER JUMPER	EXPANSION JOINT W/O ELECTRICAL BONDING CONNECTION
Enphase Microinverter (MI) Requirements (Model No. M215 & M250)	**Enphase Microinverter (MI) Requirements (Model No. M215 & M250)**	**Enphase Microinverter (MI) Requirements (Model No. M215 & M250)**
3 Microinverters sharing same trunk cable & rails	3 or more Microinverters sharing same trunk cable & rails	MIn. 3 Microinverters on each side of thermal break

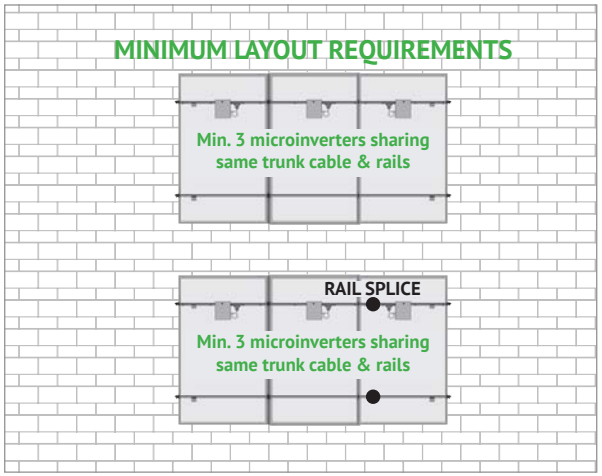

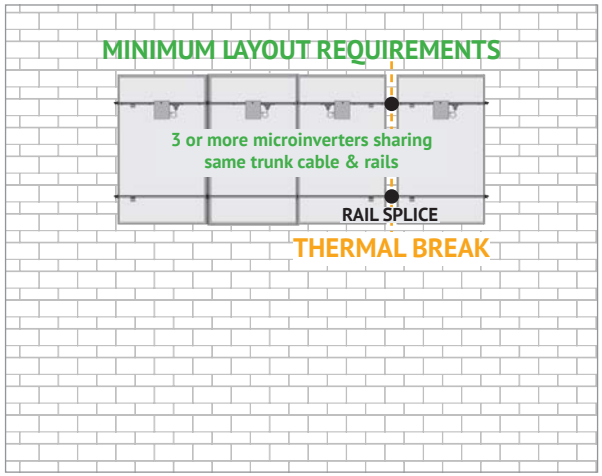

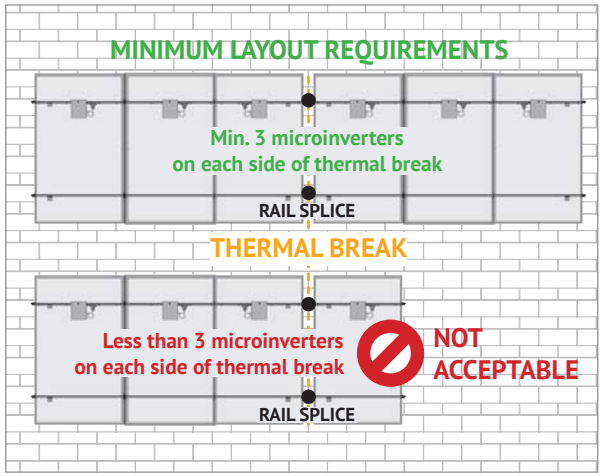

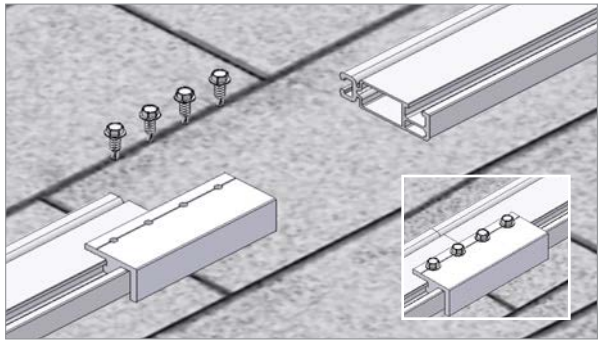

ELECTRICAL BONDING SPLICE

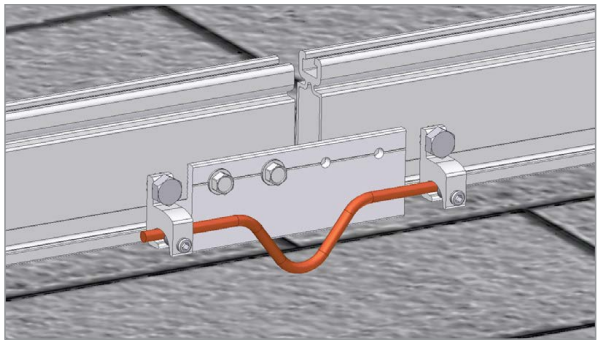

EXPANSION JOINT USED AS THERMAL BREAK W/ GROUNDING LUGS & COPPER JUMPER

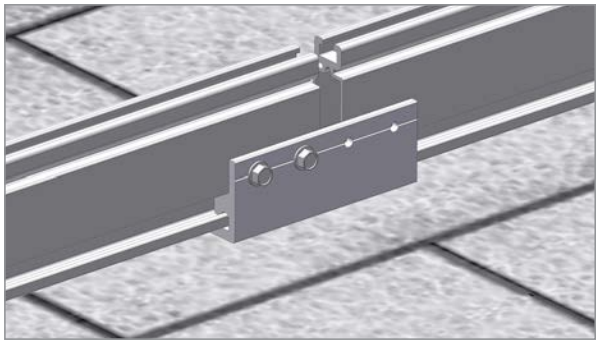

EXPANSION JOINT USED AS THERMAL BREAK W/O ELECTRICAL BONDING CONNECTION

NOTE: THE ABOVE IMAGES ARE SAMPLE CONFIGURATIONS TO ILLUSTRATE THE REQUIREMENTS FOR SM SYSTEM GROUNDING THROUGH ENPHASE MICROINVERTERS DESCRIBED ON PAGE I-2

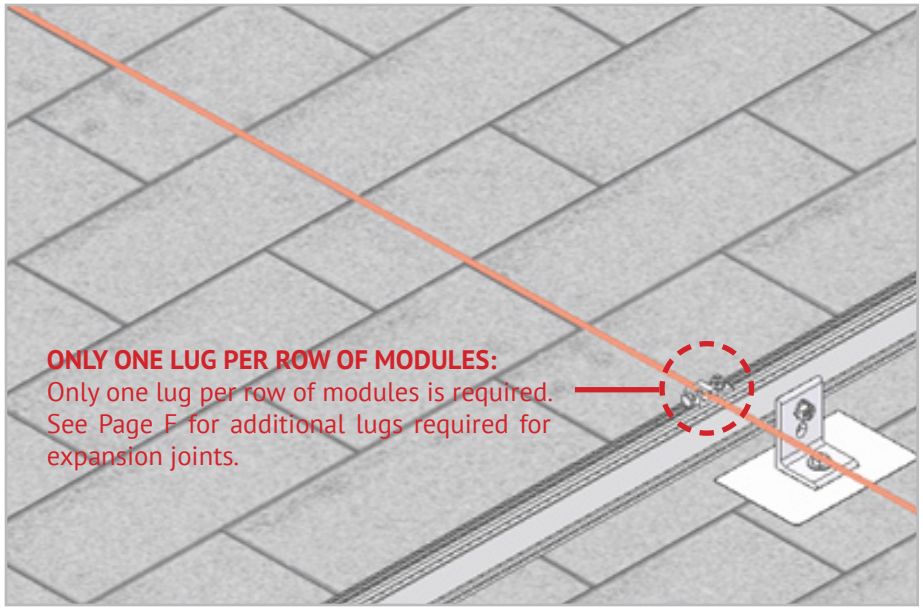

GROUNDING LUG MOUNTING DETAILS:
Details are provided for both the WEEB and Ilsco products. The WEEBLug has a grounding symbol located on the lug assembly. The Ilsco lug has a green colored set screw for grounding indication purposes. Installation must be in accordance with NFPA NEC 70, however the electrical designer of record should refer to the latest revision of NEC for actual grounding conductor cable size.

Required if not using approved integrated grounding microinveters

GROUNDING LUG - BOLT SIZE & DRILL SIZE		
GROUND LUG	**BOLT SIZE**	**DRILL SIZE**
WEEBLug	1/4"	N/A - Place in Top SM Rail Slot
ILSCO Lug	#10-32	7/32"

- Torque value depends on conductor size.
- See product data sheet for torque value.

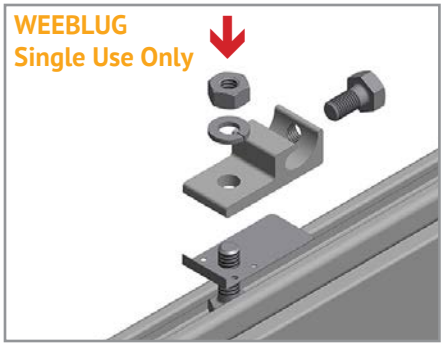

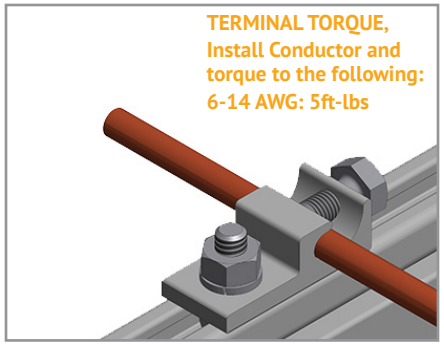

WEEBLUG CONDUCTOR - UNIRAC P/N 008002S:
Apply Anti Seize and insert a bolt in the aluminum rail and through the clearance hole in the stainless steel flat washer. Place the stainless steel flat washer on the bolt, oriented so the dimples will contact the aluminum rail. Place the lug portion on the bolt and stainless steel flat washer. Install stainless steel flat washer, lock washer and nut. Tighten the nut until the dimples are completely embedded into the rail and lug.
TORQUE VALUE 10 ft lbs. (See Note on PG. A)
See product data sheet for more details, Model No. WEEB-LUG-6.7

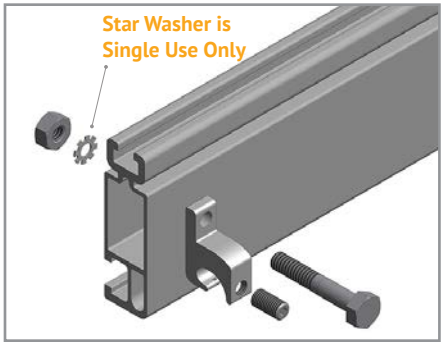

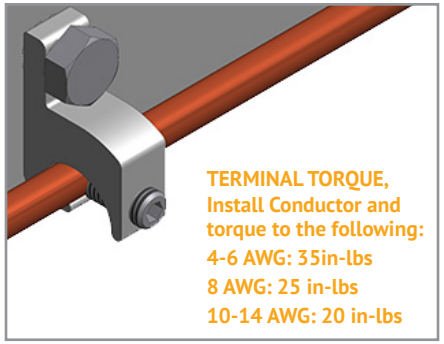

ILSCO LAY-IN LUG CONDUCTOR - UNIRAC P/N 008009P: Alternate Grounding Lug - Drill, deburr hole and bolt thru both rail walls per table.
TORQUE VALUE 5 ft lbs. (See Note on PG. A)
See ILSCO product data sheet for more details, Model No. GBL-4DBT.

NOTE: ISOLATE COPPER FROM ALUMINUM CONTACT TO PREVENT CORROSION

ENDCLAMP, FIRST MODULE &TRIM

INSTALL MODULE ENDCLAMPS: The Endclamp is supplied as an assembly with a T-bolt, serrated flange nut, and washer. The washer retains the clamp at the top of the assembly. This will enable the clamp to remain upright for module installation.

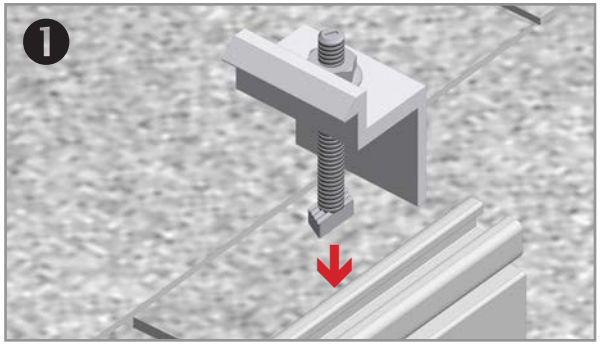

INSERT ENDCLAMP T-BOLT: Insert 1/4" T-bolt into rail.

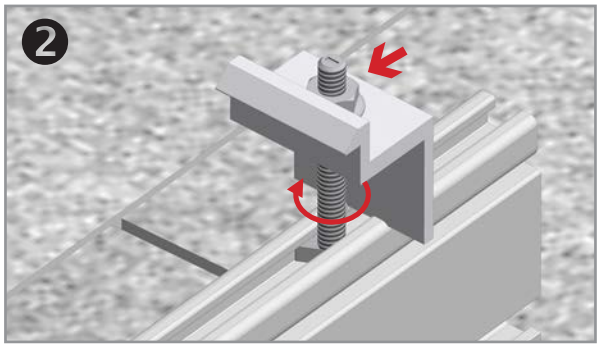

ROTATE ENDCLAMP T-BOLT: Rotate T-bolt into position. Verify that the position indicator & T-bolt shaft are angled in the correct position.

End clamps are positioned on rails prior to the first end module and installed after the last end module.

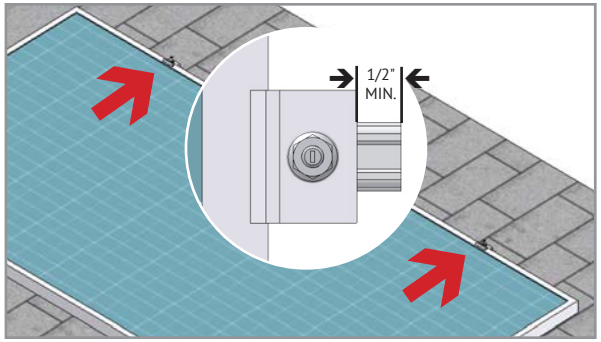

INSTALL FIRST MODULE: Install the first end module onto rails. Engage module frame with Endclamps. Verify that the position indicator & T-bolt shaft are angled in the correct position.

TORQUE VALUE (See Note on PG. A) 1/4" nuts to 10 ft-lbs. w/Anti Seize

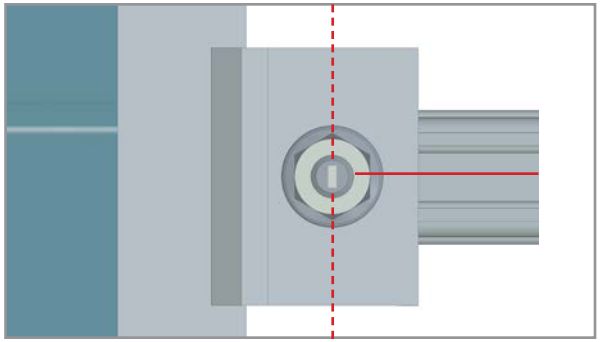

POSITION INDICATOR - SERRATED T-BOLT: Verify the T-bolt position indicator is perpendicular to the rail.

TRIM INSTALLATION INSTRUCTIONS

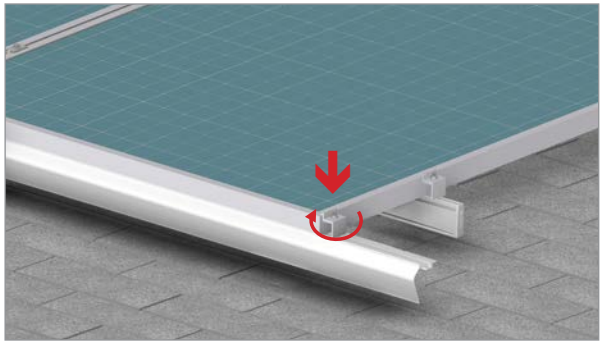

TRIM ENDCLAMPS: Install Endclamps on Trim in like manner to module endclamps per install instructions above.

TORQUE VALUE (See Note on PG. 1)
1/4" nuts to 10 ft-lbs w/ Anti Seize

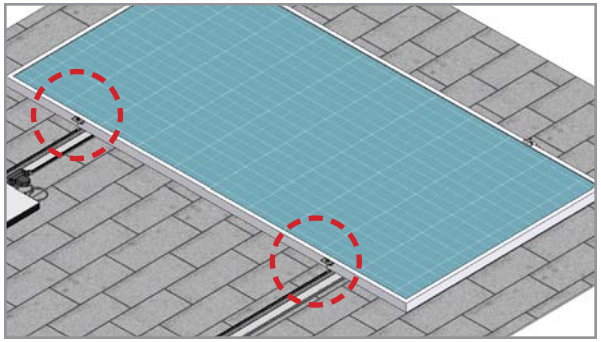

INSTALL MIDCLAMPS: Midclamp is supplied as an assembly with a T-bolt for module installation. Clamp assemblies may be positioned in rail near point of use prior to module placement.

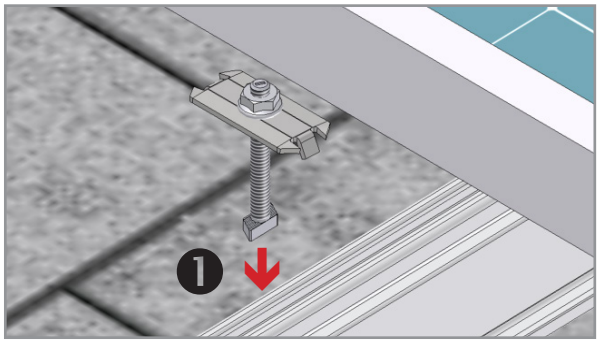

INSERT MIDCLAMP T-BOLT: Apply Anti-Seize and insert 1/4" T-bolt into rail.

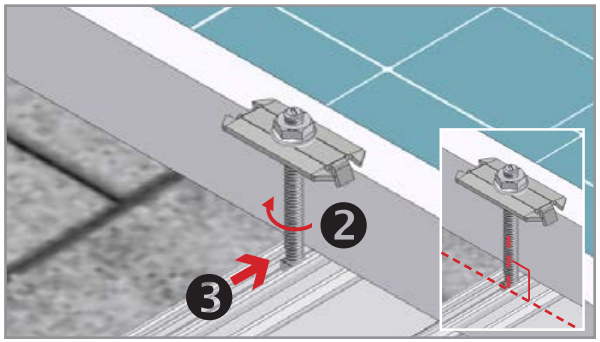

ROTATE MIDCLAMP T-BOLT: Rotate bolt into position and slide until bolt and clamp are against module frame. Do not tighten nut until next module is in position. Verify that the position indicator & T-bolt shaft are angled in the correct position.

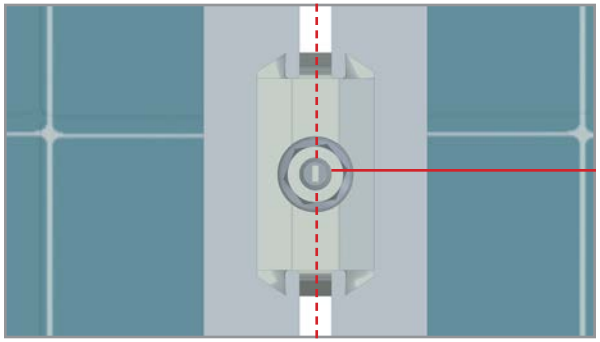

POSITION INDICATOR - SERRATED T-BOLT: Verify the T-bolt position indicator is perpendicular to the rail.

TRIM INSTALLATION INSTRUCTIONS

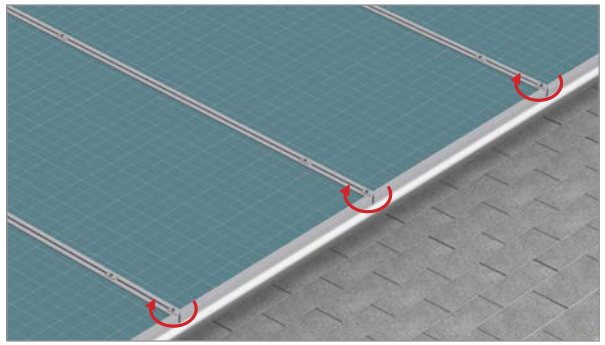

TRIM MIDCLAMPS: Ensure Trim lip is in contact with module face and verify alignment marks on T-bolts are in proper position, tighten midclamp on Trim, repeat at each gap between modules.

TORQUE VALUE (See Note on PG. 1)
1/4" nuts to 10 ft-lbs w/ Anti Seize

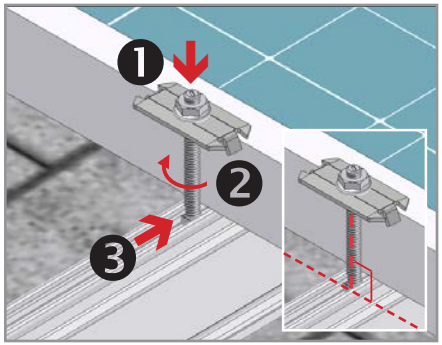

INSTALL REMAINING MID-CLAMPS: Proceed with module installation. Engage each module with previously positioned Midclamp assemblies.

NOTE: Apply Anti-Seize to each Mid Clamp prior to installation.

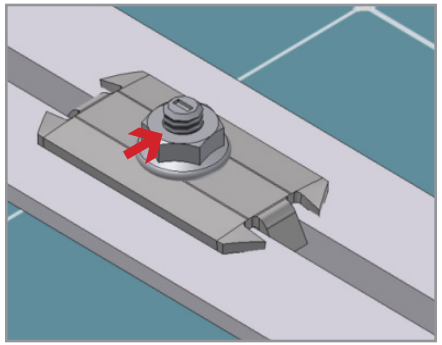

POSITION T-BOLT ALIGNMENT MARKS: Verify that the position indicator(s) & T-bolt shaft(s) are angled in the correct position.

TORQUE VALUE (See Note on PG. A)
1/4" nuts to 10 ft-lbs. w/Anti Seize

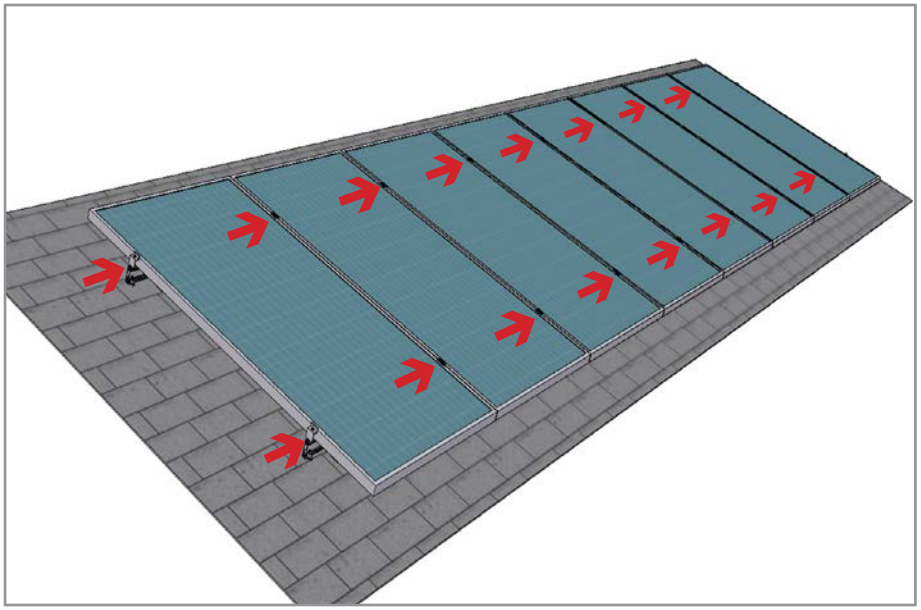

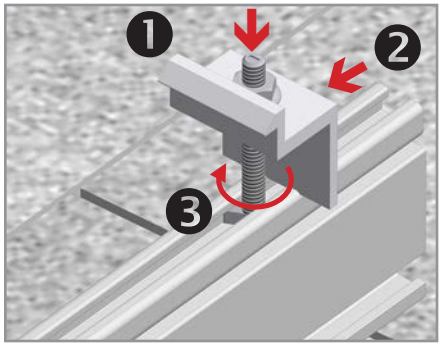

INSTALL ENDCLAMPS: Apply Anti-Seize and install final Endclamps in same manner as first Endclamps. Slide clamps against module.

TORQUE VALUE (See Note on PG. A)
1/4" nuts to 10 ft-lbs. w/Anti Seize

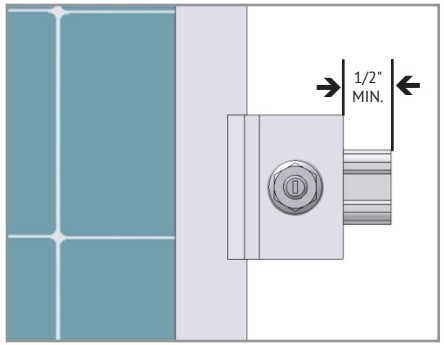

POSITION T-BOLT ALIGNMENT MARKS & CUT RAIL: Verify that the position indicator(s) & T-bolt shaft(s) are angled in the correct position. Trim off any excess rail, being careful not to cut into the roof. Allow ½" between the Endclamp and the end of the rail.

FINISH MODULE INSTALLATION: Proceed with module installation. Engage each module with the previously positioned clamp assembly:

- Install second module
- Install remaining Midclamps & modules & position alignment marks
- Install Endclamps & position alignment marks
- Cut rail to desired length

TRIM INSTALLATION INSTRUCTIONS

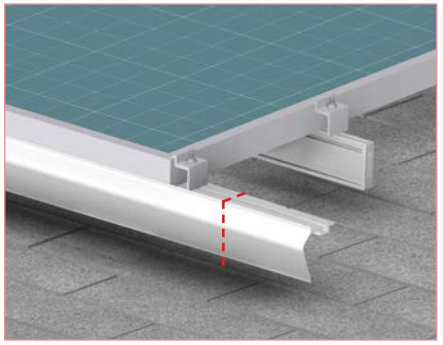

FINISH TRIM INSTALLATION, INSTALL ENDCLAMP & CUT EXCESS RAIL: Install final endclamp & Cut away excess Trim at end of array or where required for proper cantilevers. **See D&E Guide or U-Builder for allowable cantilevers.**

TORQUE VALUE (See Note on PG. 1)
1/4" nuts to 10 ft-lbs w/ Anti Seize

SM SOLAR MOUNT

BONDING CONNECTION GROUND PATHS

INSTALLATION GUIDE

M PAGE

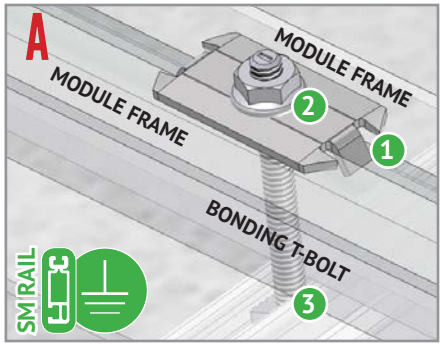

BONDING MIDCLAMP ASSEMBLY

1. Stainless steel Midclamp points, 2 per module, pierce module frame anodization to bond module to module through clamp.
2. Serrated flange nut bonds stainless steel clamp to stainless steel T-bolt
3. Serrated T-bolt head penetrates rail anodization to bond T-bolt, nut, clamp, and modules to grounded SM rail.

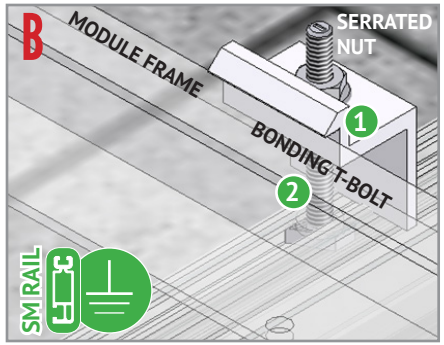

ENDCLAMP ASSEMBLY

1. Serrated flange nut bonds aluminum Endclamp to stainless steel T-bolt
2. Serrated T-bolt head penetrates rail anodization to bond T-bolt, nut, and Endclamp to grounded SM rail

Note: End clamp does not bond to module frame.

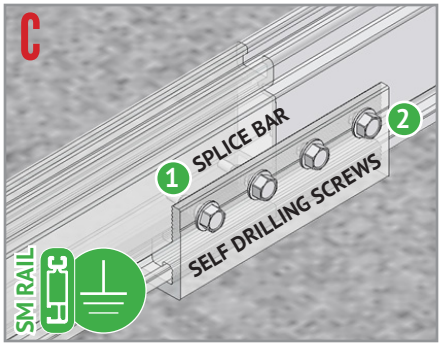

BONDING RAIL SPLICE BAR

1. Stainless steel self drilling screws drill and tap into splice bar and rail creating bond between splice bar and each rail section
2. Aluminum splice bar spans across rail gap to create rail to rail bond. Rail on at least one side of splice will be grounded.

Note: Splice bar and bolted connection are non-structural. The splice bar function is rail alignment and bonding.

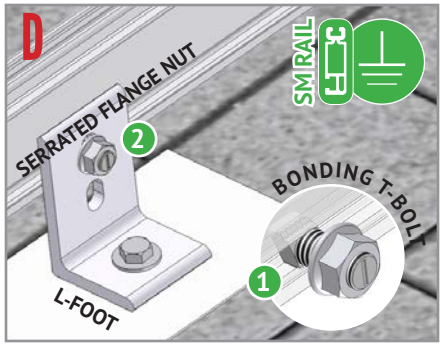

RAIL TO L-FOOT w/BONDING T-BOLT

1. Serrated flange nut removes L-foot anodization to bond L-Foot to stainless steel T-bolt
2. Serrated T-bolt head penetrates rail anodization to bond T-bolt, nut, and L-foot to grounded SM rail

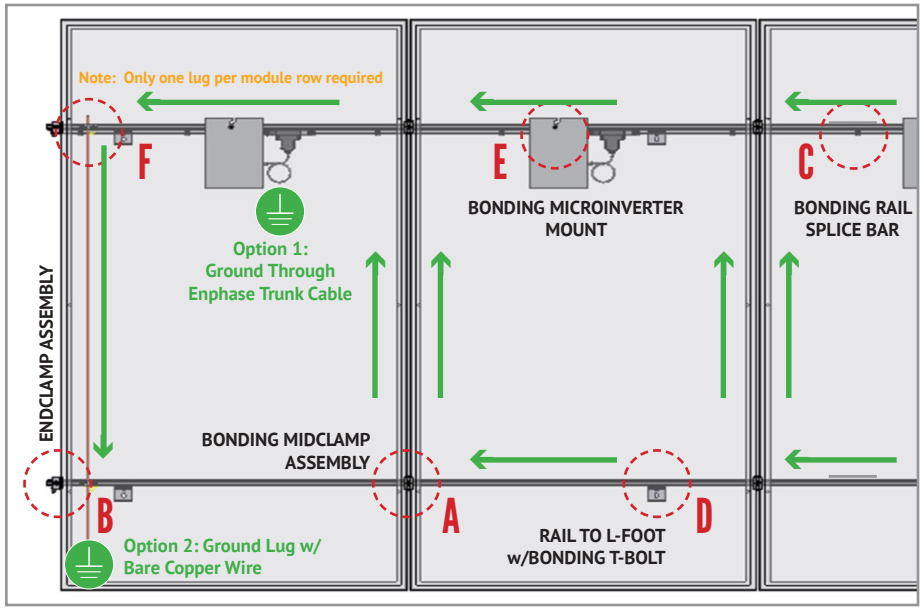

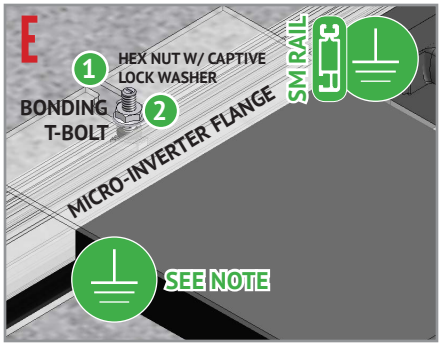

BONDING MICROINVERTER MOUNT

1. Hex nut with captive lock washer bonds metal microinverter flange to stainless steel T-bolt
2. Serrated T-bolt head penetrates rail anodization to bond T-bolt, nut, and L-foot to grounded SM rail

System ground including racking and modules may be achieved through the trunk cable of approved microinverter systems. See page I for details

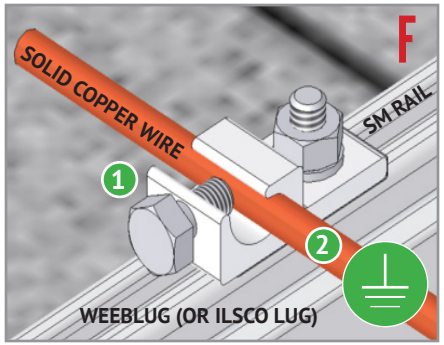

RACK SYSTEM GROUND

1. WEEB washer dimples pierce anodized rail to create bond between rail and lug
2. Solid copper wire connected to lug is routed to provide final system ground connection.

NOTE: Ilsco lug can also be used when secured to the side of the rail. See page I-3 for details

BONDING CONNECTION GROUND PATHS

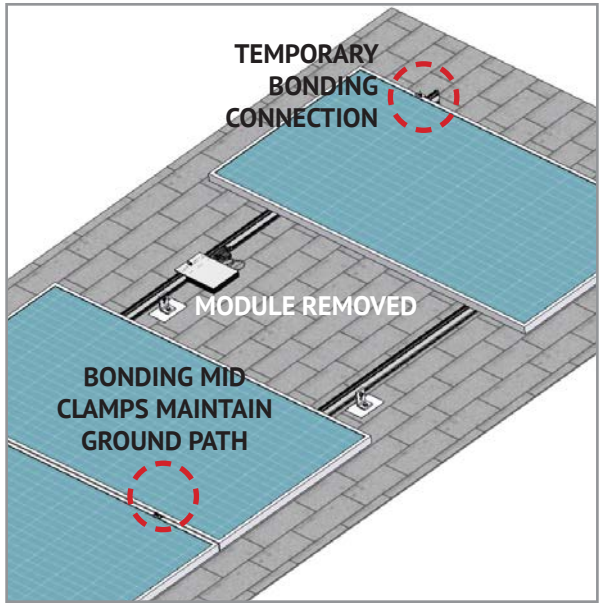

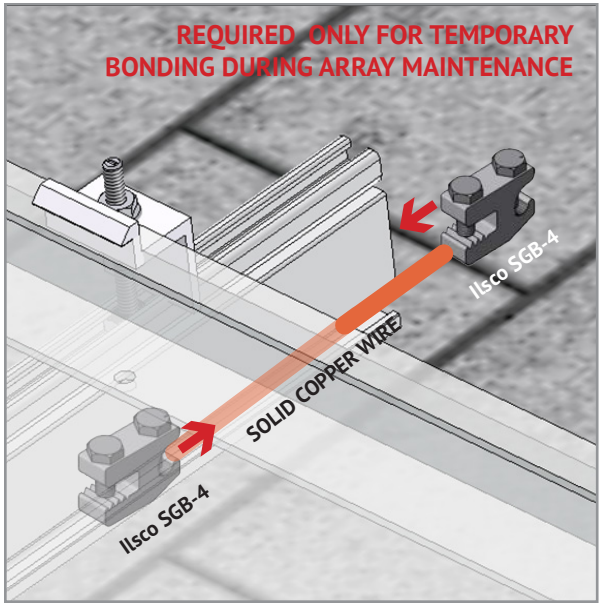

TEMPORARY BONDING CONNECTION DURING ARRAY MAINTENANCE

When removing modules for replacement or system maintenance, any module left in place that is secured with a bonding Midclamp will be properly grounded. If a module adjacent to the end module of a row is removed or if any other maintenance condition leaves a module without a bonding mid clamp, a temporary bonding connection must be installed as shown

- Attach Ilsco SGB4 to wall of rail
- Attach Ilsco SGB4 to module frame
- Install solid copper wire jumper to Ilsco lugs

ELECTRICAL CONSIDERATIONS

SOLARMOUNT is intended to be used with PV modules that have a system voltage less than or equal to 1000 VDC. For standard system grounding a minimum 10AWG, 105°C copper grounding conductor should be used to ground a 1000 VDC system, according to the National Electric Code (NEC). It is the installer's responsibility to check local codes, which may vary. See below for interconnection information.

INTERCONNECTION INFORMATION

There is no size limit on how many SOLARMOUNT & PV modules can be mechanically interconnected for any given configuration, provided that the installation meets the requirements of applicable building and fire codes.

GROUNDING NOTES

The installation must be conducted in accordance with the National Electric Code (NEC) and the authority having jurisdiction. Please refer to these resources in your location for required grounding lug quantities specific to your project.

The grounding / bonding components may overhang parts of the array so care must be made when walking around the array to avoid damage.

Conductor fastener torque values depend on conductor size. See product data sheets for correct torque values.

TRIM RETROFIT INSTALLATION

INSTALLATION GUIDE

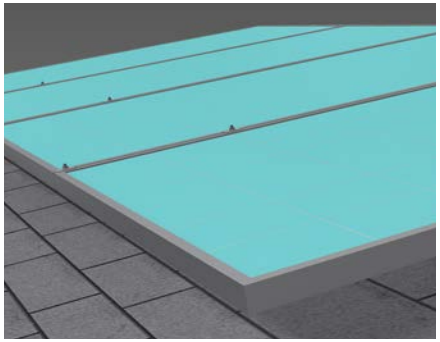

PREPARATION: At front edge of array, ensure at least 3.25 inches of space between modules and roof surface and that modules are aligned to within 3/8". Plan for Trim length so that Endclamps can be properly installed.

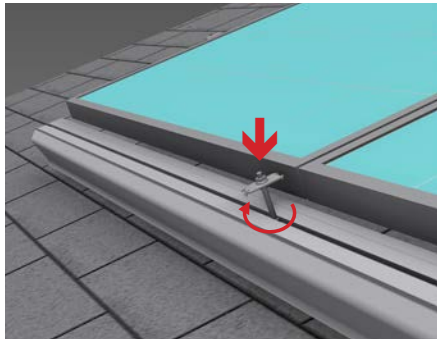

1ST MIDCLAMP: Position Trim in front of array. Insert Midclamp into the Trim slot, aligned with the gap between the 1st two modules at either end of array.

NOTE: Apply Anti-Seize to Each Mid-Clamp prior to installation

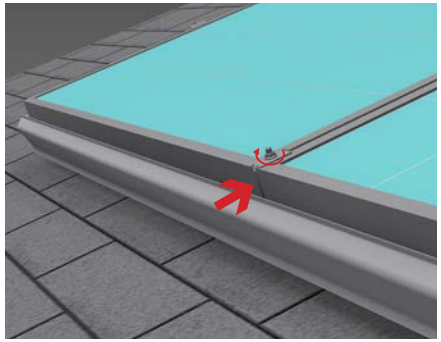

MOUNT TRIM: Position Trim beneath modules by sliding T-bolt into gap between modules and tighten. Midclamp should stay in position and support Trim. Tighten snugly enough so that Trim is held firmly in place.

TORQUE VALUE: Do not exceed specified torque value (10 ft-lbs)

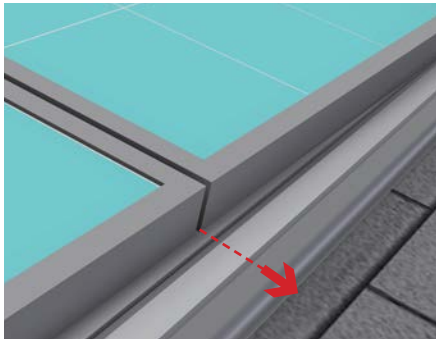

CLEAR T-BOLT SLOT: Rotate unattached end of Trim out and away from array so T-bolt slot (at next T-bolt insertion point) is clear of modules. This may require force to deflect the Trim slightly. Deflect only enough to insert T-bolt.

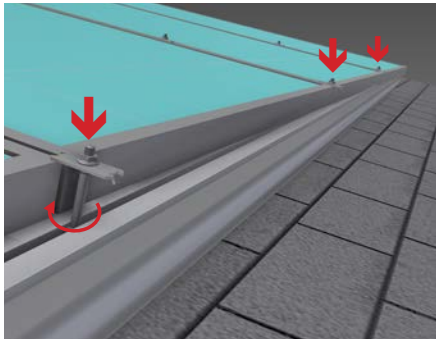

INSERT MIDCLAMPS: Insert T-bolt into slot and slide clamp (rotating Trim) into position between modules and leave loose. Continue to work down array, inserting Midclamps and positioning in gaps between modules.

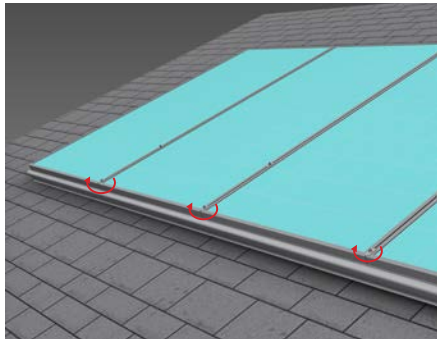

FASTEN MIDCLAMPS: Return to each inserted Midclamp. Ensuring Trim lip is in contact with module face and verifying alignment marks on T-bolts are in proper position, tighten clamp.

TORQUE VALUE (See Note on PG. 1)
1/4" nuts to 10 ft-lbs w/ Anti Seize

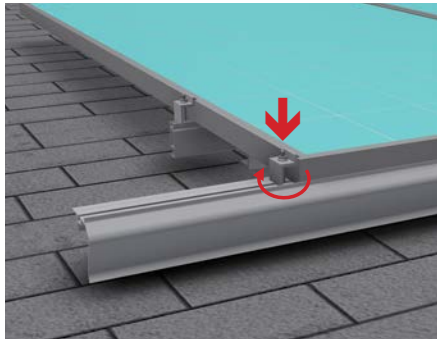

ENDCLAMPS: Install Endclamps per previous Endclamp install instructions

TORQUE VALUE (See Note on PG. 1)
1/4" nuts to 10 ft-lbs w/ Anti Seize

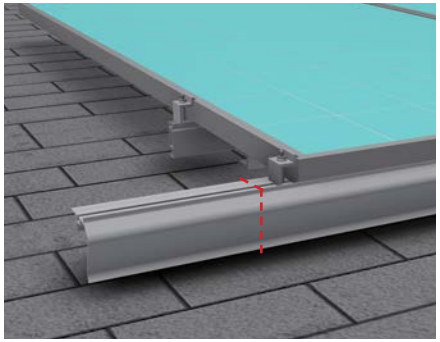

CUT EXCESS TRIM: Mark excess Trim and cut at end of array or where required for proper cantilevers.